Sjoberg's Inc.

315 N. Main Ave.

Thief River Falls, MN 56701

218-681-3044

www.mncable.net

July 9, 2012

Wendy Mattson
Pennington County Law Enforcement
102 West 1st Street
Thief River Falls, MN 56701

Dear Ms. Mattson,

Sjoberg's Inc. will provide a fiber connection for the Pennington County Law Enforcement Center (the LEC) between the Center and the Pennington County Courthouse. It will be a single, single mode fiber from the equipment room in the Courthouse to the equipment room in the LEC. Sjoberg's will be responsible for bringing the fiber into the LEC and the City of Thief River Falls / Pennington County shall be responsible for installing conduit from the mechanical room at the LEC to the final termination location. Sjoberg's will then pull the fiber in. Sjoberg's will provide the 1 Gb/s optics on the fiber at each end and splice the appropriate connectors on the fiber.

The cost of this project will be $5000 installation and a monthly rental and maintenance fee of $40 per month for 5 years. After 5 years, both parties may agree to extend the contract for 1 year renewals. Construction should take less than 120 days. Thank you for this opportunity to do business with Pennington County. If you have any questions, please feel free to call me.

Sincerely,

Richard J. Sjoberg
rsjoberg@mncable.net
218-681-3044

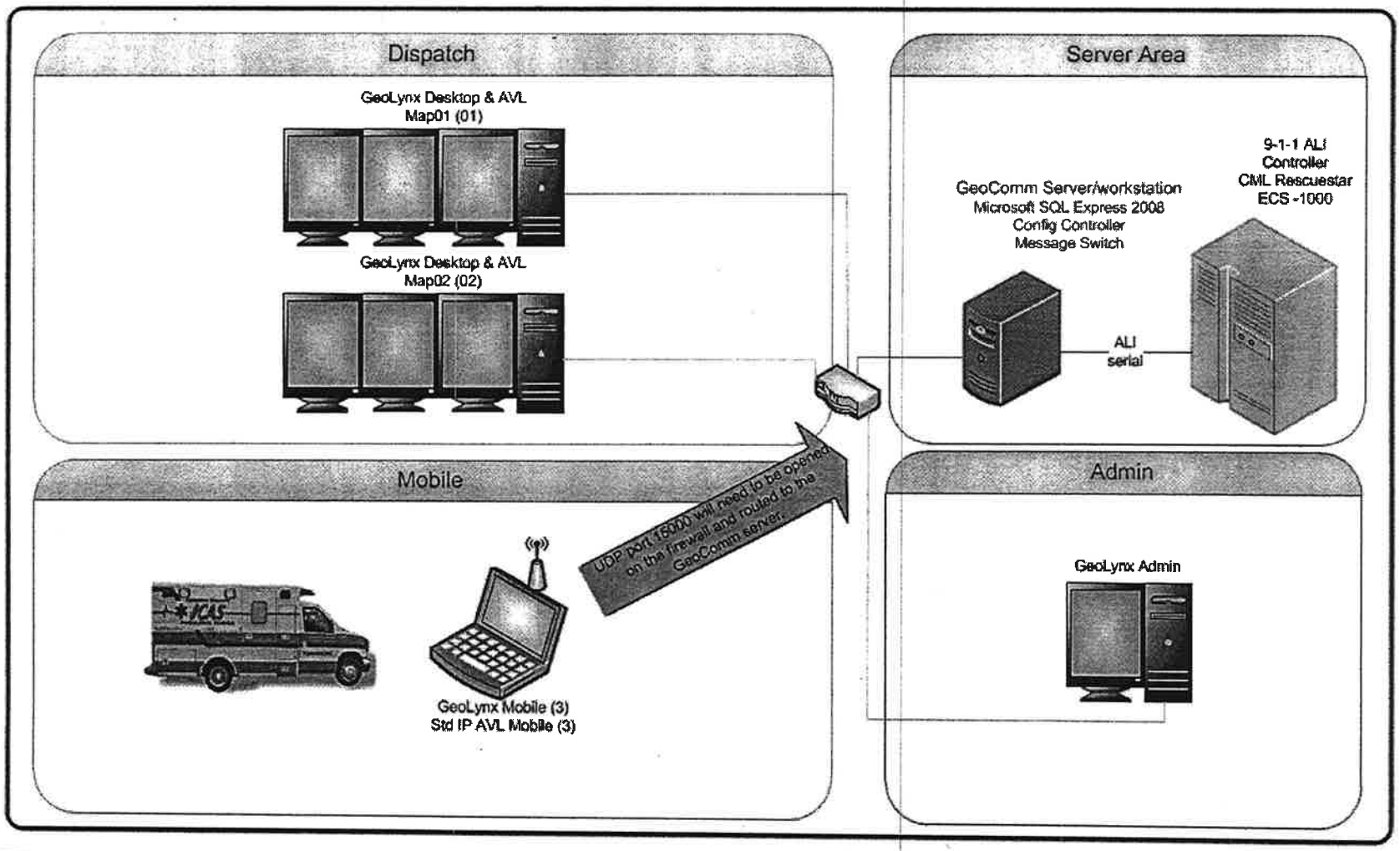

GeoComm

601 West Saint Germain St.
St. Cloud, MN 56301
Phone: (320) 240-0040
Fax: (320) 240-2389

2 – GeoLynx 9-1-1(8.0.2)
2 – GeoLynx AVL
1 – GeoLynx Admin
3 – GeoLynx Mobile
3 – StdIP AVL Mobile
1 – GeoComm Message Switch
1 – Microsoft SQL Express 2008
6 – 10 sp2 ESRI Runtimes

Drawn By: MD | Date: 3/30/2012 | Revised: 3/30/2012

File name: PenningtonMN_installdiagram.vsd
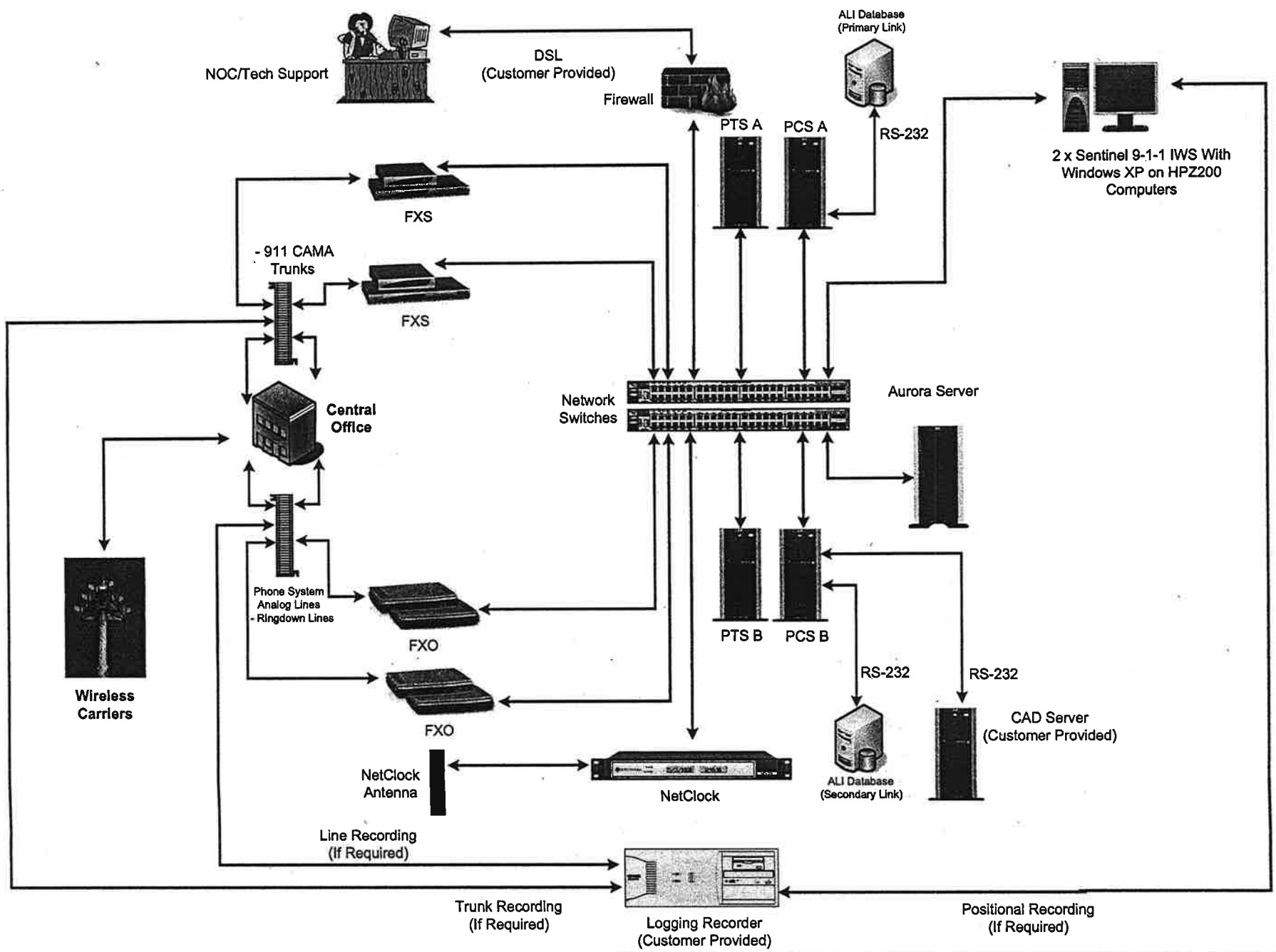
Pennington County Sentinel Patriot Network